Proboscis Kitchen Faucet

KT-03-009

Specifications

Material
Lead Free Brass

Available Finishes
Brushed Nickel

Valve
Ceramic Cartridge

Dimensions
Faucet Height: 5-7/8”
Spout Height: 4-15/16”
Spout Reach: 8-11/16”

Certifications
California Energy Commission (CEC),
ASME A112.18.1-2012/CSA B125.1-12,
NSF/ANSI 372,
NSF/ANSI 61

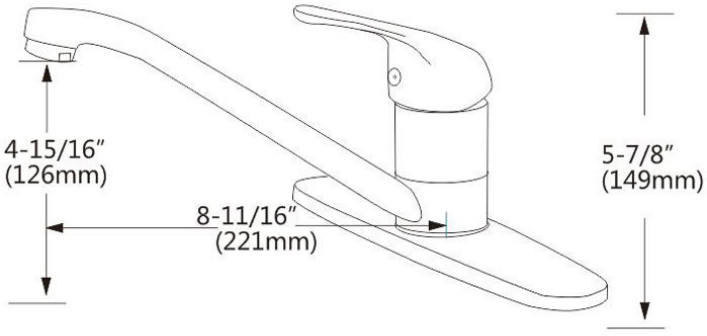

Certified to NSF/ANSI 61 & 372

Email: info@roswellusa.com
Phone: 1-762-244-0424

BUILDERSTOCK Global Buying Gateway
Copyright © 2017